09/12/24 M/S

USN | | | | | | | | | | |

[22CSE152]

FIFTH SEMESTER B.Tech EXAMINATION, DECEMBER - 2024

SOFTWARE TESTING

Time: 3 Hours **Maximum Marks: 100**

Instructions: i. Missing data may be suitably assumed.

ANSWER ALL QUESTIONS

		PART-A			**5 x2=10**
1.	**a.**	Define Error, Failures in software.	L1	CO1	**02**
	b.	Explain white box testing.	L2	CO4	**02**
	c.	Discuss static testing techniques	L2	CO3	**02**
	d.	Describe error seeding.	L2	CO4	**02**
	e.	Outline the automated testing tools.	L1	CO5	**02**
		PART-B			**6 X 5=30**
2.	**a.**	Prof. Pawan kalyan is looking for a black box testing technique which will check software's consistency at boundary values. Identify and interpret a testing technique which will serve the purpose.	L3	CO1	**05**
		OR			
	b.	Explain Boundary value Analysis in detail.	L2	CO1	**05**
3.	**a.**	Calculate the cyclomatic complexity for the module given in diagram. Write all the paths. Provide the definition of cyclomatic complexity. 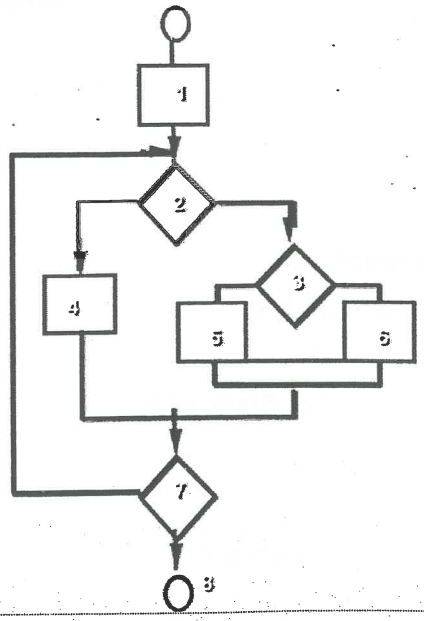	L3	CO2	**05**
		OR			
	b.	Explain the following with respect to testing: **i.** Statement coverage **ii.** Branch Coverage	L2	CO2	**05**

Deemed-to-be University Learning Resource Centre Jain Global Campus Ramanagara

4.	**a.**	Discuss the following terminologies : **i.** Decision Coverage **ii.** Condition Coverage	L2	CO2	**05**
		OR			
	b.	Illustrate the path coverage with suitable example.	L3	CO2	**05**
5.	**a.**	Explain System testing with suitable example.	L2	CO3	**05**
		OR			
	b.	Describe Non-Incremental Integration testing in details.	L2	CO3	**05**
6.	**a.**	Discuss the issues in object-oriented testing.	L2	CO4	**05**
		OR			
	b.	Describe test cases and class hierarchy	L2	CO4	**05**
7.	**a.**	Illustrate Inter class test case design	L3	CO5	**05**
		OR			
	b.	Demonstrate multiple class testing with suitable example.	L3	CO5	**05**
		PART-C		**6 X 10=60**	
8.	**a.**	Mr.Ganguly is trying to divide the inputs into equal classes and carry on the testing of newly developed cyber security software. Appraise him a suitable testing technique and elaborate to accomplish the task.	L3	CO1	**10**
		OR			
	b	Illustrate State Table Based Testing with suitable example.	L3	CO1	**10**
9.	**a.**	**i.** Describe various path testing terminologies. **ii.** Discuss important guidelines for basis path testing.	L2 L2	CO2 CO2	**05** **05**
		OR			
	b.	**i.** Write the flow graph notations for following programming construct: Squence, If-then-else, Do-While, While-do, Switch case **ii.** Describe the concept of Black box testing	L3 L2	CO2 CO2	**05** **05**
10.	**a.**	Illustrate Regression testing with suitable example.	L3	CO3	**10**
		OR			
	b.	Discuss the Interaction testing technique with suitable example.	L2	CO3	**10**
11.	**a.**	Illustrate integration testing and its important types.	L3	CO3	**10**
		OR			

	b.	Illustrate performance testing and its matrices.	L3	CO3	**10**
12.	**a.**	Discuss Fault-based testing.	L2	CO4	**10**
		OR			
	b.	Illustrate Scenario based test design.	L3	CO4	**10**
13.	**a.**	Demonstrate testing web based systems with suitable example.	L3	CO5	**10**
		OR			
	b.	Illustrate tests derived from behavioral models.	L3	CO5	**10**